1800 Series
Camera-mount UHF Wireless
Microphone Systems (dual-channel)

wireless
wireless
wireless
wireless
wireless

ATW-1821 UniPak® Body-pack Transmitter System
ATW-1822 Plug-on Transmitter System
ATW-1823 Plug-on and Body-pack Transmitter System

Set-up and Operation

audio-technica

This device complies with part 15 of the FCC Rules. Operation is subject to the condition that this device does not cause harmful interference.

This device complies with INDUSTRY CANADA R.S.S. 210, en conformité avec IC: RSS-210/CNR210.

Operation is subject to the following conditions: 1) This device may not cause harmful interference and 2) this device must accept any interference received, including interference which may cause undesired operation. Changes or modifications not expressly approved by Audio-Technica could void your authority to operate this equipment.

Notice to individuals *with implanted cardiac pacemakers or AICD devices:*
Any source of RF (radio frequency) energy may interfere with normal functioning of the implanted device. All wireless microphones have low-power transmitters (less than 0.05 watts output) which are unlikely to cause difficulty, especially if they are at least a few inches away. However, since a "body-pack" mic transmitter typically is placed against the body, we suggest attaching it at the belt, rather than in a shirt pocket where it may be immediately adjacent to the medical device. Note also that any medical-device disruption will cease when the RF transmitting source is turned off. Please contact your physician or medical-device provider if you have any questions, or experience any problems with the use of this or any other RF equipment.

CAUTION! The circuits inside the receiver and transmitter have been precisely adjusted for optimum performance and compliance with federal regulations. Do not attempt to open the receiver or transmitter. To do so will void the warranty, and may cause improper operation.
Warning: To prevent fire or shock hazard, do not expose this appliance to rain or moisture.
Attention: Pour prévenir feu ou choc électrique, ne pas exposé l'appareil à la pluie ou à l'humidité.

About RF Interference

Please note that wireless frequencies are shared with other radio services. According to Federal Communications Commission regulations, "Wireless microphone operations are unprotected from interference from other licensed operations in the band. If any interference is received by any Government or non-Government operation, the wireless microphone must cease operation..."

If you need help with operation or frequency selection, please contact your local dealer or Audio-Technica. Extensive wireless information also is available at www.audio-technica.com.

Contents

Components and System Configurations 3
System Features 4
Quick Overview of System Operation 5
Receiver Controls 6
Operating the Receiver 8
Transmitter Controls 11
Operating the Transmitter 12
Tips for Best Results 14
Specifications 15

1800 Series Components (dual-channel)

Receiver and Included Components/Accessories

ATW-R1820
Dual-channel receiver

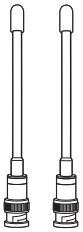

Two detachable antennas

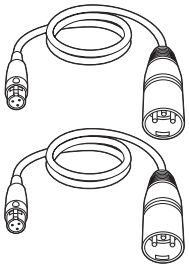

Two 18" output cables, TA3F to XLRM

Pouch with belt clip (holds receiver)

Note: All model numbers have an additional letter at the end to indicate frequency band.

Transmitters

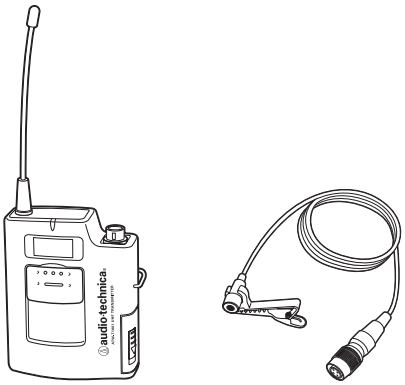

ATW-T1801
UniPak® transmitter with included omnidirectional lavalier microphone

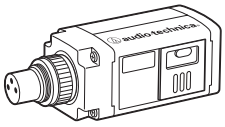

ATW-T1802
Plug-on transmitter

System Configurations

ATW-1821
Camera-mount UHF Wireless Microphone System (dual-channel) with Body-pack Transmitters

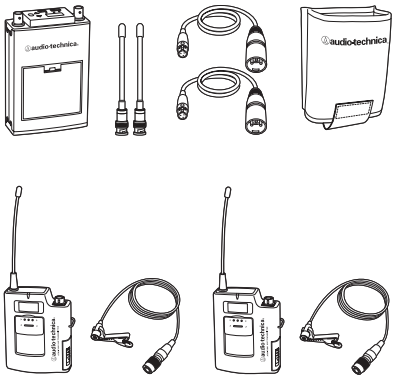

ATW-1822
Camera-mount UHF Wireless Microphone System (dual-channel) with Plug-on Transmitters

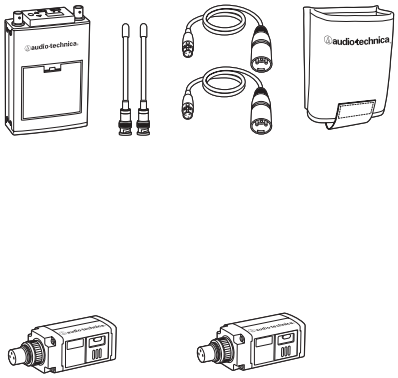

ATW-1823
Camera-mount UHF Wireless Microphone System (dual-channel) with Body-pack and Plug-on Transmitters

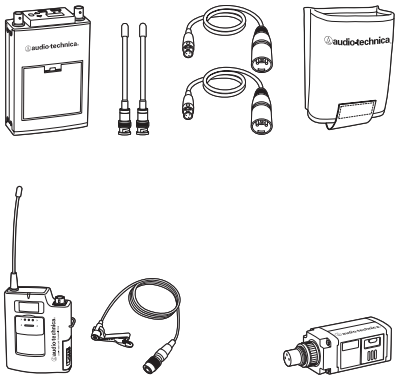

System Features (dual-channel)

- **Two completely independent receiver channels in a single unit, for simultaneous operation of two microphones**
- **True Diversity operation for resistance to multi-path interference and dropouts**
- **UHF reception with 996 frequencies selectable in 25 kHz steps**
- **Automatic frequency scanning for easy selection of open channels**
- **Tone Lock™ squelch system eliminates interference when transmitter is off**
- **Two independent balanced outputs**
- **Headphone monitor output with independent level control**
- **Battery fuel-level indicators on transmitters and receiver**
- **Soft-touch controls for easy frequency selection**
- **LCD frequency and battery status display with backlight on receiver and transmitters**
- **Antenna and AF Peak LED indicators**
- **Dual-channel receiver can operate in single-receiver mode to extend battery life when only one audio channel is required**
- **Compact dual receiver is easy to mount on a camera**
- **Transmitters operate in low or high transmission modes to conserve battery life/maximize power**
- **Easy, user-friendly operation**
- **Clear, natural sound quality**
- **Powered by AA batteries or by external 12V DC power (not included)**
- **System components of the 1800 Series and 3000 Series UHF wireless systems can be used interchangeably**

Quick Overview of System Operation

Thank you for purchasing this Audio-Technica 1800 Series Dual-channel Camera-mount UHF Wireless Microphone System. All 1800 Series systems are designed primarily to be used with video cameras, with the ATW-R1820 dual-channel receiver mounted on a camera and connected to the camera's audio input; the systems may also be used with other components equipped with microphone-level input(s).

This system is equipped with a dual receiver, which consists of two completely independent receiver channels in a single unit, for simultaneous operation of two microphones.

First, insert batteries (*see Battery Installation, page 8*). **Note: The ATW-R1820 dual-channel receiver also functions without batteries if connected to an external power supply (12V DC source, 500 mA nominal current, not included).**

Next, attach the antennas to the antenna input jacks, and mount the ATW-R1820 dual-channel receiver to your camera (mounting hardware not included); or use the included pouch with belt clip to attach the ATW-R1820 to your belt. Connect the output cable(s) to the ATW-R1820 and your video camera (and/or audio mixer). (*See Output A, Output B, and Output Select Switch, page 7.*)

Turn the ATW-R1820 Power Switch on. Choose "1" to activate only Receiver Channel 1 and Output A (Power/Peak LED 1 should light red); this option will increase useable battery life. Choose "Both" to activate both receiver channels and both outputs (Power/Peak LEDs 1 and 2 should light red). (*See Power Switch with four positions: External, Off, 1, Both, page 6.*)

Select a frequency for Receiver Channel 1 and Receiver Channel 2. (*See Selecting Frequencies on your Receiver, page 8.*)

NOTE: Receiver Channel 1 and Receiver Channel 2 must be set to different frequencies to avoid interference. Transmitter-Receiver pairs must be set to identical frequencies: set Transmitter 1 to the same frequency as Receiver Channel 1; set Transmitter 2 to the same frequency as Receiver Channel 2.

If your system is equipped with a UniPak® Body-pack Transmitter and lavalier microphone: Plug the included lavalier microphone(s) into the UniPak® body-pack transmitter(s) and position microphone(s) on your subject about six inches below the chin. Anticipate movements that may cause the microphone to rub against or be covered by clothing, and position the microphone to avoid it. Turn the power on, select a frequency and choose other settings. (*See Operating the Transmitter, page 12.*)

If your system is equipped with a Plug-on Transmitter:
Attach a microphone (dynamic or condenser) to the plug-on transmitter's input connector (*see Microphone Input, page 11).* The transmitter provides power to condenser microphones rated to operate on 12V phantom power or less. Turn the power on, select a frequency and choose other settings. (*See Operating the Transmitter, page 12.*)

ATW-R1820 Dual-channel Receiver Controls (front panel)

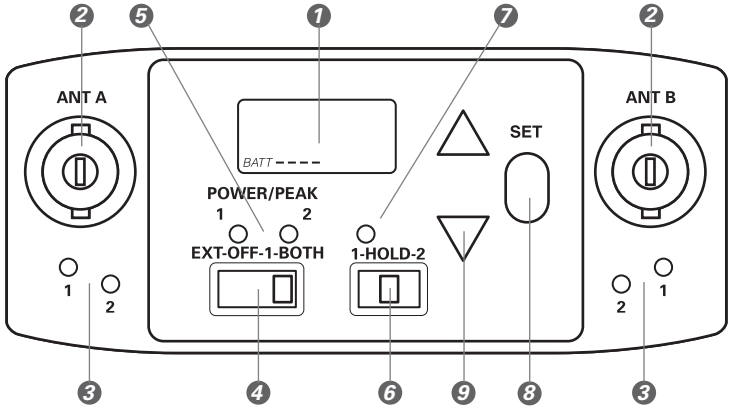

LCD ❶ Liquid Crystal Display shows battery status and frequency settings. (Use the Dual-channel Control Switch (6) to select frequencies for Receiver Channel 1 and Receiver Channel 2; in Hold position, only Receiver Channel 1 frequency appears in LCD.) Battery meter is only active when Dual-channel Control Switch is in the Hold position.

Antenna Input Jacks ❷ BNC-type antenna connectors. Antennas A & B (split internally) both provide signals for Receiver Channel 1 and Receiver Channel 2. Attach the antennas to the antenna input jacks. Make certain that during operation there is a clear open-air path between the receiver antennas and the transmitters.

Diversity Indicators for each antenna for each receiver ❸ True Diversity operation: two antennas feed two completely independent RF sections on the same frequency for each receiver; automatic logic circuitry selects the superior signal.

Diversity Indicator 1 indicates which tuner has the better reception and is in operation for Receiver Channel 1; Diversity Indicator 2 indicates which tuner has the better reception and is in operation for Receiver Channel 2.

Power Switch with four positions: External, Off, 1, Both ❹ Turns the unit on and off.

Choose "Ext," if the unit is connected to an external power supply (12V DC source, 500 mA nominal current, not included). In "Ext" position, both receiver channels and both outputs are activated (indicated by illumination of Power/Peak LEDs 1 and 2).

Choose "Off" to turn the unit off.

Choose "1" to activate only a single receiver channel (Receiver Channel 1/Output A, indicated by the illumination of Power/Peak LED 1). This conserves energy if you are only using one audio channel.

Choose "Both" to activate both receiver channels and both outputs (indicated by illumination of Power/Peak LEDs 1 and 2).

Note: Selected receiver will be muted unless Dual-channel Control Switch (6) is in Hold position.

Power/Peak LED ❺ Indicates which receiver channel(s) is (are) in operation. Also indicates receiver overload by turning off; too much signal will cause blinking LED (off during peaks). To correct overload, adjust audio gain on transmitter. (*See Audio Input Level (Gain) Adjustments, page 13.*)

Dual-channel Control Switch with three positions: 1, Hold, 2 ❻ This switch allows you to use the single LCD window to control each of the two receiver channels separately.

To set frequency for Receiver Channel 1, switch to 1 (left position).
To set frequency for Receiver Channel 2, switch to 2 (right position).
To lock settings and operate unit, switch to Hold (center position).

Note: Receiver Channel 1 is muted when switch is at 1; Receiver Channel 2 is muted when switch is at 2; both channels un-mute when switch is at Hold.

Dual-channel Control LED ❼ This LED is red when switch is in position 1, indicating muted operation for Receiver Channel 1. It is also red when switch is in position 2, indicating muted operation for Receiver Channel 2. LED turns green in Hold position, indicating unit is ready for operation.

Set ❽ Use with the Dual-channel Control Switch and Up/Down arrows to choose operating frequencies manually or automatically (using your choice of three automatic scan groups).

Up/Down Arrows ❾ Press Up or Down arrows, in conjunction with the Set button, to choose operating frequencies manually or automatically (using your choice of three automatic scan groups).

(rear panel)

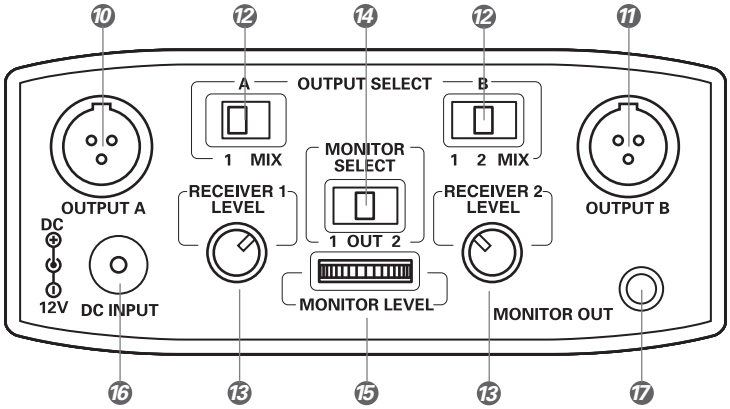

Balanced Audio Output Jack: TA3M-type connector. Pin 1: ground (shield); Pin 2: "audio +"; Pin 3: "audio -." Use the included TA3F to XLRM interface cable to connect the receiver output to a balanced microphone-level input on a camera, mixer or integrated amplifier.

⑩ Output A

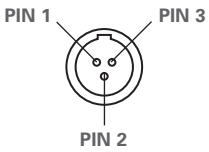

Balanced Audio Output Jack: TA3M-type connector. Pin 1: ground (shield); Pin 2: "audio +"; Pin 3: "audio -." Use the included TA3F to XLRM interface cable to connect the receiver output to a balanced microphone-level input on a camera, mixer or integrated amplifier.

⑪ Output B

The rear panel provides two balanced audio outputs (Outputs A & B). The unit is equipped with an output select switch that assigns a signal to each of the audio outputs, as follows:

⑫ Output Select Switch

Output A (left) can be assigned either Receiver Channel 1 or Mix. (Mix = Ch. 1 and Ch. 2 signals mixed together. The relative levels of each signal can be adjusted using the individual receiver level controls.)

Output B (right) can be assigned either Receiver Channel 1, Receiver Channel 2, or Mix.
Note: Output B is not active when Power Switch is in "1" position.

Typical configuration: Output A is assigned Channel 1; Output B is assigned Channel 2, feeding individual channels in a mixer or camera. Many other options are available, providing much flexibility. For instance:

- If your camera doesn't accept two inputs, you can sum the signal from both transmitters in Output A and connect this mixed signal to your camera.
- You can connect Output A (mixed signal) to a camera, and Output B (mixed signal) to an audio mixer.
- When using the unit with a single transmitter with both outputs active (Power Switch set at Both), Output A can be used to feed a camera, while Output B can feed an audio mixer (both with identical signals from Receiver Channel 1).

The signal levels of each receiver signal (Receiver Channel 1 and Receiver Channel 2) may be adjusted using these controls. When the outputs are assigned to a single receiver signal, these controls will adjust the output level. (Turn clockwise to increase output level.) When the outputs are assigned to Mix, these controls adjust the relative levels between the receiver signals.

⑬ Receiver Level Controls (1 and 2)

This switch assigns a signal to the monitor headphone output.

- Choose **1** (left position) to hear Channel 1 in both ears (mono signal, stereo output);
- Choose **2** (right position) to hear Channel 2 in both ears (mono signal, stereo output);
- Choose **OUT** (middle position), to hear Output A in the left ear, and Output B in the right ear.

⑭ Monitor Select Switch

The level control (volume control) for headphones is independent of other level controls. Turn to the right to increase the volume.

⑮ Monitor Level Control

You may connect the unit to an external power supply (12V DC source, 500 mA nominal current, not included). In this case, move the Power Switch to the "Ext" position; both receiver channels are activated (indicated by illumination of Power/Peak LEDs 1 and 2).

⑯ DC Input

1/4" TRS jack.

⑰ Monitor Output

ATW-R1820 Dual-channel Receiver Batteries

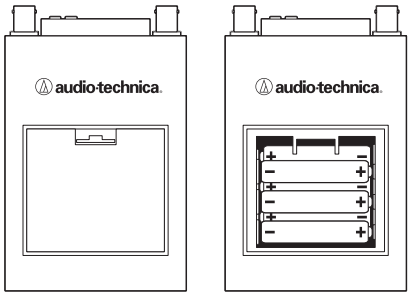

Battery Selection Each ATW-R1820 dual-channel receiver uses six 1.5V AA batteries, not included. Alkaline type is recommended. Always replace all batteries. Make certain the receiver power is Off before replacing batteries. **Note: The ATW-R1820 receiver also functions without batteries if connected to an external power supply (12V DC source, 500 mA nominal current, not included).**

Battery Installation
1. Open the battery compartment door by pushing the catch back.
2. Observe correct polarity as marked and carefully insert six fresh 1.5V AA alkaline batteries (*see above*).
3. Replace the door, making certain the latch clicks securely in place.

Battery Condition Indicator After the batteries are installed, turn the power on by moving the Power Switch to either the 1 or Both position. The small red power-on LED(s) (*see **a** at left*) should light (red light at 1 if Power Switch is in position 1; red light at 1 and 2 if Power Switch is in Both position) and the LCD window should come on. If this does not happen, the batteries are installed incorrectly or they are depleted.

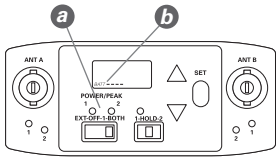

The receiver's "fuel gauge" battery indicator (*see **b** at left*) displays a maximum of four bar segments. When LCD flashes "LOW.BAT," the batteries should be replaced immediately to ensure continued operation. **Note: Battery indicator is only visible in the "Hold" position.**

Operating the Receiver

NOTE: Receiver Channel 1 and Receiver Channel 2 must be set to different frequencies to avoid interference. Transmitter-Receiver pairs must be set to identical frequencies: set Transmitter 1 to the same frequency as Receiver Channel 1; set Transmitter 2 to the same frequency as Receiver Channel 2.

Selecting Frequencies on your Receiver Overview…
1. Turn the power on by moving the Power Switch to either the 1 position (for single-channel operation) or Both position (for dual-channel operation).

2. Switch the Dual-channel Control Switch to 1 (to set frequency for Receiver Channel 1) or 2 (to set frequency for Receiver Channel 2). Audio output is muted for the channel that is selected.

3. Press the Set button to enter the Frequency Selection Menu mode; the word "MENU" will appear.

4. Use the Up/Down arrows to cycle through functions:
   - first arrow up is Manual Frequency Selection mode;
   - second arrow up is Automatic Scan Group 1;
   - third arrow up is Automatic Scan Group 2;
   - fourth arrow up is Automatic Scan Group 3;
   - fifth arrow up is Quit, allowing exit from Menu mode.

Dual-channel Operation (using two transmitters) Setting Receiver Frequency Manually First…
Turn the power on by moving the Power Switch to Both (for dual-channel operation). To set frequency for Receiver Channel 1, switch Dual-channel Control Switch to 1 (left position).

1. Press Set button. The word "MENU" will appear. Press Up arrow to show current frequency. Press Set button and frequency will begin to flash; then use up and down arrows to adjust the frequency. Frequency changes in 25 kHz steps. To increase scroll speed, hold the Up or Down arrow for more than 4 seconds.

2. When you arrive at desired frequency, press and hold the Set button until the word "STORED" appears. Frequency is now set.

3. To "back out" of the Manual Frequency Set mode without making a frequency choice, simply press the Set button once to exit the menu and return the receiver to normal operation. The word "ESCAPE" will appear in the window, and no changes in frequency setting will be made; the receiver's audio output will again be enabled (when Dual-channel Control Switch is returned to Hold position).

To set frequency for Receiver Channel 2, switch Dual-channel Control Switch to 2 (right position). Repeat steps 1-2 above.

To lock settings and operate unit, switch Dual-channel Control Switch to Hold (center position).

Note: While Channel Selection mode is still active, if the Dual-channel Control Switch is moved back to Hold position before channel selection is complete, LED will remain red and audio will remain muted until the control sequence is completed.

Using the Automatic Scan Function to Set Receiver Frequency (dual-channel operation)

First…
Turn the power on by moving the Power Switch to Both (for dual-channel operation). Then switch Dual-channel Control Switch to 1 (left position).

1. Press the Set button to enter the Frequency Selection Menu mode; the word "MENU" will appear.

2. Use the Up or Down arrow to reach Scan 1, Scan 2, or Scan 3. Press the Set button once to select one of these three Scan groups. The word "SCAN1", "SCAN2" or "SCAN3" will flash in the LCD window.

3. Press the Up or Down arrow to begin the scan. Press the Up arrow to scan up from the lowest frequency in the group; press the Down arrow to scan down from the highest frequency in the group.

4. The first available frequency will flash in the LCD window. To activate this frequency selection, press and hold the Set button until the word "STORED" appears in the LCD window.

5. If you do not wish to use the frequency found, you may press the Up or Down arrow. The Up arrow will scan upwards, the Down arrow will scan downwards, from the frequency you are on.

6. To set frequency for Receiver Channel 2 (for dual-channel operation), switch Dual-channel Control Switch to 2 (right position). Repeat steps 1-4 above. Note: Be certain to select the same Scan Group that you used for Receiver Channel 1.

7. To lock settings and operate unit in dual-channel operation (using two transmitters), switch Dual-channel Control Switch to Hold (center position). The receiver will return to normal operation, audio function will be restored and the Dual-channel Control LED indictor will turn green.

8. If you are using multiple systems, use the same scan group for all receivers. After completing the first receiver's scan and frequency selections, set its transmitters to the appropriate frequencies (*see How to Set Frequencies on your Transmitter, page 12*); leave the transmitters On, and run the next receiver's automatic scan function. Always set a receiver-transmitter pair to the same frequency before using the automatic scan function to select frequencies for the next receiver.

In the event that no more free frequencies are available within the scan group, the receiver will indicate "END" on the receiver display. In this case, select a different scan group for both Receiver Channels 1 and 2 and re-scan.

Note: While Channel Selection mode is still active, if the Dual-channel Control Switch is moved back to Hold position before channel selection is complete, LED will remain red and audio will remain muted until the control sequence is completed.

Single-channel Operation (using one transmitter) Setting Receiver Frequency Manually

First…
Turn the power on by moving the Power Switch to the 1 position (for single-channel operation). Switch Dual-channel Control Switch to 1 (left position). Output from Receiver Channel 1 is now muted. **Note: Output B is not active when the Power Switch is in the "1" position.**

1. Press Set button. The word "MENU" will appear. Press Up arrow to show current frequency. Press Set button and frequency will begin to flash; use up and down arrows to adjust the frequency. Frequency changes in 25 kHz steps. To increase scroll speed, hold the up or down arrow for more than 4 seconds.

2. When you arrive at desired frequency, press and hold the Set button until the word "STORED" appears. Frequency (which appears on the screen) is now set.

3. To "back out" of the Manual Frequency Set mode without making a frequency choice, simply press the Set button once to exit the menu and return the receiver to normal operation. The word "ESCAPE" will appear in the window, and no changes in frequency setting will be made; the receiver's audio output will again be enabled.

To lock settings, un-mute and operate the unit, switch Dual-channel Control Switch to Hold (center position).

Using the Automatic Scan Function to Set Receiver Frequency (single-channel operation)

First…
Turn the power on by moving the Power Switch to 1 (for single-channel operation). Then switch Dual-channel Control Switch to 1 (left position). **Note: Output B is not active when Power Switch is in the "1" position.**

1. Press the Set button to enter the Frequency Selection Menu mode; the word "MENU" will appear.

2. Use the Up or Down arrow to reach Scan 1, Scan 2, or Scan 3. Press the Set button once to select one of these three Scan groups. The word "SCAN1", "SCAN2" or "SCAN3" will flash in the LCD window.

3. Press the Up or Down arrow button to begin the scan. Press the Up arrow to scan up from the lowest frequency in the group; press the Down arrow to scan down from the highest frequency in the group.

4. The first available frequency will flash in the LCD window. To activate this frequency selection, press and hold the Set button until the word "STORED" appears in the LCD window.

5. If you do not wish to use the frequency found, you may press the Up or Down arrow. The Up arrow will scan upwards, the Down arrow will scan downwards, from the frequency you are on.

6. To lock settings and operate unit in single-channel operation (using one transmitter), switch Dual-channel Control Switch to Hold (center position). The receiver will return to normal operation, audio function will be restored and the Dual-channel Control LED indicator will turn green.

ATW-T1801 UniPak® Body-pack & ATW-T1802 Plug-on Transmitter Controls

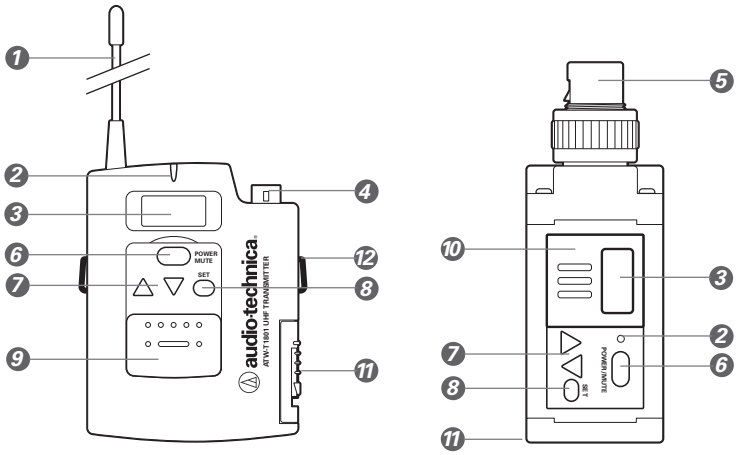

1 *Antenna*

The ATW-T1801 UniPak® body-pack transmitter includes a field-replaceable flexible antenna. For best results, allow the antenna to hang freely and full length from the bottom of the transmitter. If the received signal is marginal, experiment with different transmitter positions or try repositioning the receiver. Since the transmitter antenna simply screws in, check to make certain it is snugly attached (finger-tight). **Do not change the length of the transmitting antenna.**

2 *Power-on LED*

Green light indicates power is on and un-muted; red light indicates that audio is muted. The light will blink when the batteries are low.

3 *LCD*

Liquid Crystal Display presents setup and operating information. The LCD in the transmitters is designed for greatest contrast and best viewing with the window rotated somewhat *away* from the viewer (about 30 degrees), not straight-on, for a more convenient holding/viewing position. The display is illuminated with a backlight when you press Set to access transmitter functions. The backlight will automatically turn off within a set period of time.

4 *Audio Input Jack*

Connect an audio input device (microphone or guitar cable) to the audio input jack on the bottom of the ATW-T1801 UniPak® Body-pack Transmitter. A number of Audio-Technica professional microphones and cables are available separately, pre-terminated with a compatible input connector (*see page 14*). The cable connector latches automatically when inserted into the transmitter jack. To unlatch and remove the connector, pull up on the connector's knurled metal collar.

5 *Microphone Input*

The ATW-T1802 plug-on transmitter has a 3-pin XLRF-type input connector with a locking collar. Use either a dynamic or a condenser microphone. The transmitter provides power to condenser microphones rated to operate on 12V phantom power or less. To attach the microphone, rotate the threaded locking collar fully clockwise ("down") until it reaches the transmitter housing (*see **a** at right*). Press the microphone and transmitter together (*see **b** at right*). Rotate the threaded collar "up" until it is firmly against the end of the mic (*see **c** at right*). Make certain the mic is securely attached before use. To detach the microphone, reverse the steps above. Always loosen the threaded collar fully before attempting to disconnect the mic.

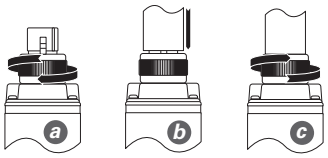

6 *Power/Mute Button*

For on/off and mute functions.

7 *Up/Down Arrows*

Press Up or Down arrows, in conjunction with the Set button, to choose operating frequencies and access transmitter functions.

8 *Set Button*

Use in conjunction with the Up/Down arrows, to choose operating frequencies and access transmitter functions.

9 *Sliding Control Cover (3-position)*

This 3-position sliding cover on the body-pack transmitter's control panel prevents accidental shut-off or channel-switching.

10 *Sliding Control Cover*

This sliding cover on the plug-on transmitter's control panel helps to prevent accidental shut-off or channel-switching.

11 *Battery Door*

Open by sliding the catch down (on body-pack) or pushing in direction of arrow (on plug-on transmitter).

12 *Mounting Clip*

The ATW-T1801 UniPak® transmitter's mounting clip may be installed with the case positioned either "up" or "down," depending upon which is preferred for the application. To turn the clip around, spring the ends of the clip out of the two holes on the sides of the transmitter case and reinstall it facing in the opposite direction.

Transmitter Batteries

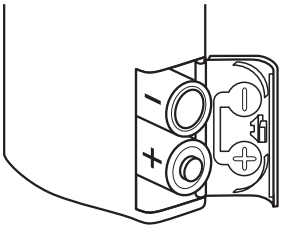

ATW-T1801

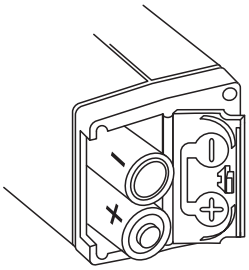

ATW-T1802

Battery Selection Each transmitter uses two 1.5V AA batteries, not included. Alkaline type is recommended. Always replace both batteries. Make certain the transmitter power is Off before replacing batteries.

Transmitter Battery Installation

1. Open the battery compartment door by sliding the catch down (on body-pack) or pushing in direction of arrow (on plug-on transmitter).
2. Observe correct polarity as marked on the metal contacts on the door and carefully insert two fresh 1.5V AA alkaline batteries.
3. Close the door, making certain the latch clicks securely in place.

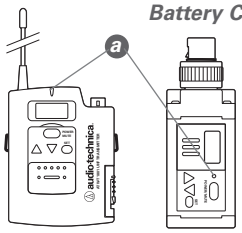

Battery Condition After the batteries are installed, turn the power on by pressing and holding the Power/Mute button. The small power-on LED (*see a at left*) should light green and the LCD window should come on. If this does not happen, the batteries are installed incorrectly or they are depleted. The transmitter's "fuel gauge" battery indicator in the LCD displays a maximum of four bar segments. When it flashes "LOW.BAT," the batteries should be replaced immediately to ensure continued operation. (Additionally, the power-on LED will flash when the batteries are low.)

Operating the Transmitter

Turning your Transmitter On & Off To turn the transmitter on, press and hold the Power/Mute button until the power indicator lights green, and the LCD window comes on (about 1-2 seconds). The operating frequency will show in the window after the power-up sequence.

To turn the transmitter off, press and hold the Power/Mute button again, until the power indicator and the LCD window are extinguished (about 1-2 seconds). The LCD window will show "PWR.OFF" before shutdown.

How to Set Frequencies on your Transmitter **NOTE: Transmitter-Receiver pairs must be set to identical frequencies: set Transmitter 1 to the same frequency as Receiver Channel 1; set Transmitter 2 to the same frequency as Receiver Channel 2.**

1. Turn transmitter on.
2. Press the Set button once and the small word "MENU" will appear above the frequency.
3. Press the Set button again and the small flashing word "EDIT" will appear to the right of "MENU."
4. Use the Up/Down arrows to change the transmitter frequency. Press either arrow for 25 kHz steps, or hold down either arrow for rapid cycling through the range. Frequencies "wrap around" when the top or bottom of the band is reached. Select the exact frequency displayed on the receiver.
5. To activate this frequency selection, press and hold the Set button until the word "STORED" appears in the transmitter's window. (If you do not wish to complete this selection, just press the Set button once: the word "ESCAPE" will appear briefly in the window and the transmitter will return to the Menu mode.)
6. When finished entering a frequency, press the Up arrow once to move to "QUIT." Then press the Set button once to exit the menu. The word "MENU" in the transmitter window will go off, indicating the return to normal operation.

How to Access & Use the Function Menu on your Transmitter

1. Turn transmitter on.
2. Press the Set button once; the small word "MENU" will appear above the frequency.
3. When in the Menu mode, use the Up and Down arrows to cycle through the following functions:
   - Frequency
   - RF Power
   - Audio Input Level
   - Power/Mute Locks
   - Input Select (body-pack only)
   - Reset to Defaults
   - Quit (exit menu)
4. To make a change in the default setting:
   - Press Set button once;
   - Press Up or Down arrow until you reach desired setting;
   - Press and hold Set button until the word "STORED" appears in the LCD window.
   - (If you do not wish to complete this selection, just press the Set button once: the word "ESCAPE" will appear briefly in the window and the transmitter will return to the Menu mode.)

Transmitter Functions

Function Menu	Default Setting	Choices (Edit)	Wrap-around*
Frequency	Lowest in band	996 frequencies (25 kHz steps)	Yes
RF Power	RF LOW	RF LOW, RF HI	Yes
Audio Input Level	+6 dB	-6 dB, 0 dB, +6 dB, +12 dB, +18	No
Power/Mute Locks	NO.LOC	NO.LOC, ALL.LOC, MUT.LOC, PWR.LOC	Yes
Input Select**	MIC	MIC, INST	Yes
Reset to Defaults	PRESET	See *Restore Default Settings,* page 14	–
Quit	QUIT	Press Set to exit	–

* Continue in the same Up/Down direction and choices "wrap around" to the other end of the range.
** On UniPak® transmitter only

RF Power Adjustments on your Transmitter

RF power may be set to "RF HI" (30 mW nominal) or "RF LOW" (10 mW nominal) through the function menu. The default setting is "RF LOW". While the High setting normally provides maximum operating range, the Low setting will help extend battery life. The Low setting may also be preferred in multichannel systems, or when operating very close to the receiver, to reduce the possibility of interference or receiver RF overload.

Audio Input Level (Gain) Adjustments on your Transmitter

Correct adjustment of transmitter audio input, receiver audio output, and mixer/amplifier input and output levels is important for best performance.

A 5-position audio input gain setting, selected through the function menu, allows you to match the audio input level to the transmitter for best modulation with minimum distortion. The choices are +18, +12 dB, +6 dB, 0 dB and -6 dB. The default value is +6 dB. Select the highest setting that does not result in over-modulation with the highest audio/instrument input levels (an AF indication on the receiver no higher than "0").

Using the Mute and Un-Mute Functions on your Transmitter

When the transmitter is muted, it produces RF with no audio. When the transmitter is un-muted, it produces both RF and audio. To mute the transmitter (cut off the audio, but continue the RF output), press and release the Power/Mute button once. The word "MUTE" will appear in the LCD window, just below the frequency, and the Power-on LED will turn red. To un-mute the transmitter (restore the audio), press and release the Power/Mute button once again. The "MUTE" will disappear from the LCD window, and the Power-on LED will turn green.

Power/Mute Locks

The Power/Mute button can be programmed (through the function menu): power can be locked On; Mute can be locked either On or Off.

Setting	Description
NO.LOC	The Power and Mute functions operate normally.
ALL.LOC	Both the Power and Mute functions are locked into their status as of the time "ALL.LOC" is applied. (Power On, and Mute either On or Off.) **Note: "ALL.LOC" must be re-accessed and the setting changed to turn the transmitter off.**
MUT.LOC	In "MUT.LOC" mode, the audio cannot be muted. The Power functioning is unaffected. (If "MUT.LOC" is applied while the transmitter is muted, pressing the Power/Mute button once will return to un-muted operation; thereafter the Mute function is disabled until the setting is changed again.)
PWR.LOC	Power is locked On as of the time "PWR.LOC"is applied. The Mute functioning is unaffected. **Note: When in the "PWR.LOC" mode, the transmitter may be turned off by: (1) Re-accessing the .LOC Menu and changing the setting, or (2) Removing and re-installing the batteries. When the transmitter is turned on again, it will power-up in the "NO.LOC" mode.** (Only the "PWR.LOC" function will change when batteries are removed; all other settings remain stored in memory.)

If an attempt is made to take an action that currently is locked out, the LCD will display "LOC.KED" briefly, then return to its previously-displayed contents.

Audio Input Selector

The UniPak® body-pack transmitter provides input connections for both low-impedance (Lo-Z) microphones and high-impedance (Hi-Z) instruments. A wide range of Audio-Technica Wireless Essentials® microphones and cables are available pre-terminated with the appropriate professional latching connector.

Select the desired input – microphone or instrument – through the function menu; "MIC" or "INST" will show in the LCD window, just below the frequency.

(continued on page 14)

Operating the Transmitter (continued)

Restore Default Settings

1. A "PRESET" selection in the menu allows you to reset all transmitter functions to their factory-default values.
2. Press the Set button once to move to Menu mode.
3. Press the Up arrow twice to move to "PRESET" in the LCD window.
4. Press the Set button once and "LOAD" will appear in the LCD.
5. Press and hold the Set button until "DEF" appears in the LCD.
6. Press and hold the Set button until "LOADED" appears briefly in the LCD. The window will then revert to "PRESET."
7. Press the Down arrow once to move to "QUIT."
8. Press the Set button once to exit the Menu mode and return to normal operation, with all factory-default settings restored.

Tips for Best Results

1. Use only fresh alkaline batteries. Always replace all batteries. Do not use "general purpose" (carbon-zinc) batteries.
2. Position the dual-channel receiver so that it has the fewest possible obstructions between it and the normal location of the transmitters. Line-of-sight is best.
3. The transmitters and the dual-channel receiver should be as close together as conveniently possible, but no closer together than three feet.
4. The receiver antennas should be in the open and away from any metal.
5. Each transmitter-receiver pair must be set to the same frequency.
6. Only one transmitter on a given frequency should be "on" at a time.
7. The power switch on the transmitter has four positions: "Ext.", "Off", "1" and "Both".
8. If the "Out Level" of either receiver channel is set too high, it may over-drive the input of the camera/mixer or clip the output of the receiver, causing distortion. Conversely, if the receiver output is set too low, the overall signal-to-noise ratio of the system may be reduced.
9. You need to change channels 1) when a strong interference signal is received, 2) when the channel breaks down, or 3) during multiple-system operation in order to select an interference-free channel. Always turn the units off before changing frequencies.
10. Turn the receiver and transmitter off when not in use. Remove the batteries during long-term storage.

Specifications†

Overall System

UHF Operating Frequencies	
Band C:	541.500 to 566.375 MHz
Band D:	655.500 to 680.375 MHz
Number of Operating Frequencies	996 total per band (25 kHz increments)
Frequency Stability	±0.005%, Phase Lock Loop frequency control
Modulation Mode	FM
Normal Deviation	±10 kHz
Operating Range	100 m (300') typical
Operating Temperature Range	23˚ F (-5˚ C) to 113˚ F (45˚ C)
Frequency Response	70 Hz to 15 kHz

ATW-R1820 Dual-channel Receiver

Receiving System	Dual independent RF sections, automatic-switching diversity
Image Rejection	>50 dB typical
Signal-to-Noise Ratio	104 dB at 30 kHz deviation (A-weighted), maximum modulation 37 kHz
Total Harmonic Distortion	<1% (±10 kHz deviation at 1 kHz)
Sensitivity	25 dBµV, (S/N 60 dB at 5 kHz deviation, A-weighted)
Audio Output (balanced)	27 mV (at 1 kHz, ±5 kHz deviation)
Output Connector	3-pin mini XLR (TA3M-type)
Monitor Headphone Output (typical)	35 mW max., 32 ohm load (per channel)
Monitor Headphone Jack	3.5 mm TRS, signals on both Tip and Ring
External Power Requirements	12V DC nominal, 500 mA
Batteries (not included)	Six 1.5V AA alkaline
Current Consumption (battery)	
Dual-channel Operation	600 mA typical
Single-channel Operation	350 mA typical
Battery Life	
Dual-channel Operation	6 hours typical*
Single-channel Operation	10 hours typical*
	* depending on battery type and use pattern
Dimensions	85.0 mm (3.35") W x 133.0 mm (5.24") H x 36.0 mm (1.42") D
Net Weight (without batteries)	425 grams (15.0 oz)
Accessories Included	Two flexible UHF antennas; two 18" TA3F to XLRM output cables; belt pouch

ATW-T1801 UniPak® Body-pack Transmitter

RF Power Output	High: 30 mW; Low: 10 mW, nominal
Spurious Emissions	Under federal regulations
Dynamic Range	>105 dB, A-weighted
Input Connections	High impedance, low impedance, bias
Batteries (not included)	Two 1.5V AA alkaline
Current Consumption	High: 180 mA; Low: 160 mA, typical
Battery Life	Approximately 6 hours (High); 8 hours (Low), depending on battery type and use pattern
Dimensions	66.0 mm (2.60") W x 87.0 mm (3.43") H x 24.0 mm (0.94") D
Net Weight (without batteries)	80 grams (2.8 oz)

ATW-T1802 Plug-on Transmitter

RF Power Output	High: 30 mW; Low: 10 mW, nominal
Spurious Emissions	Under federal regulations
Dynamic Range	>105 dB, A-weighted
Input Connector	3-pin locking XLRF-type
Microphone Power	Provides power to condenser microphones rated to operate on 12V phantom power or less.
Batteries (not included)	Two 1.5V AA alkaline
Current Consumption	High: 180 mA; Low: 160 mA, typical
Battery Life	Approximately 6 hours (High); 8 hours (Low), depending on battery type and use pattern
Dimensions	40.0 mm (1.57") x 111.0 mm (4.37") x 40.0 mm (1.57")
Net Weight (without batteries)	199 grams (7.0 oz)

† Specifications are subject to change without notice.

audio-technica

Audio-Technica U.S., Inc.
1221 Commerce Drive, Stow, Ohio 44224 (330) 686-2600
www.audio-technica.com

P52016-01 ©2011 Audio-Technica U.S., Inc. Printed in U.S.A.