DASH NO.	M CODE	MADE FROM

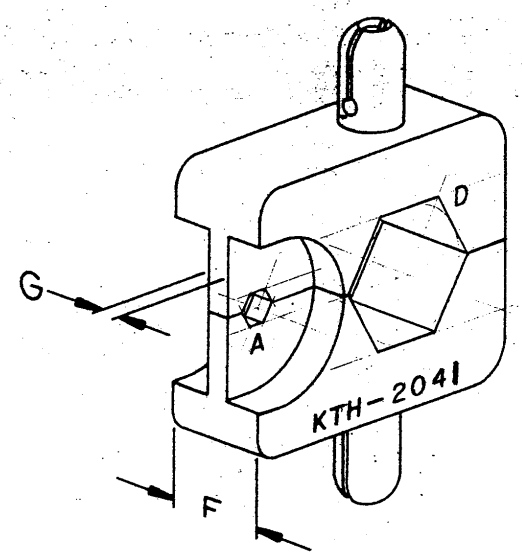

HEX SIZES (ACROSS FLATS)					DIE WIDTH	DIE WIDTH		
A	B	C	D		F	G	H	I
.072	—	—	.429	—	.900	.093	—	—

UNLESS OTHERWISE SPECIFIED:

1. TOLERANCES: FRACTIONS & 2 PLACE DECIMALS ± .010
   3 PLACE DECIMALS ± .004 ANGLES ± 0°30′
   T. I. R. CONCENTRICITY OF ANY 2 DIAMETERS MAY NOT EXCEED HALF THE SUM OF THEIR TOLERANCES.
2. REMOVE ALL BURRS, BREAK SHARP EDGES .005 MAX.
3. NO FILLETS PERMITTED.
4. SURFACE ROUGHNESS 63 MICROINCHES RMS MAX.
5. ALL DIMENSIONS PRIOR TO PLATING.
6. ALL PLATING IN ACCORDANCE WITH KER 10004.

KTH-2041 S-D

REVISIONS

ISSUE	CHANGES

S-D

SCALE 2:1

USED ON:

REF:

CRIMP DIE

DRAWN PAJ	DATE 17 JUN 80
APPR. MJB	DATE 18 JUN 80

KINGS
ELECTRONICS CO., INC.
TUCKAHOE, NEW YORK 10707

KTH-2041 S-D