DASH NO.	M CODE	MADE FROM

SD

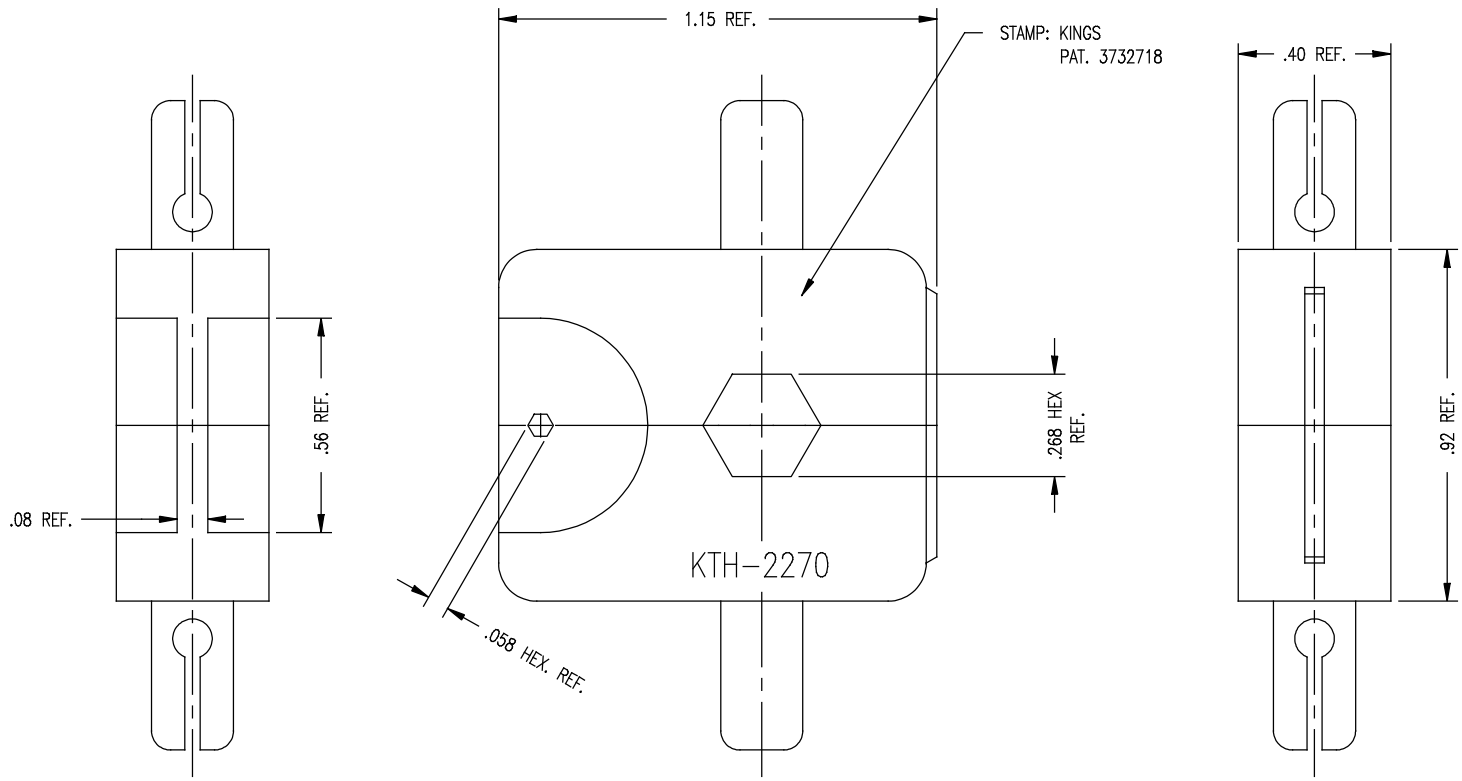

NOTES:
1. FOR USE WITH BELDEN 1694A CABLE.

SD

KTH-2270

REVISIONS

ISSUE	CHANGES
0	ER 38636 DCT 8/16/02

SCALE 3:1

APPROX SURFACE AREA

USED ON 2065-22-9

REF: E-20041

CRIMP DIE

DRAWN	DCT	DATE	8/16/02
DESIGN	DCT	DATE	8/16/02
APPR.	–	DATE	–

KINGS
ELECTRONICS CO., INC.
ROCK HILL, SOUTH CAROLINA 29730

KTH-2270