Breaking the Distance Limits of HD Matrix Technology

HDR-Ultra

Expandable HDMI Matrix over Cat5e/6

Route up to 16 HDMI 1080p sources with multi-channel audio and IR
to as many as 16 screens, with up to 450 feet of extension over Cat5e/6

MADE IN THE USA

MEMBER OF HDCP GROUP

HD ready 1080p

Smart-AVI
SMART AUDIO VIDEO INNOVATION

LONG DISTANCE HDMI ROUTING

Break the Distance Limits with HDR-Ultra

The HDR-Ultra is an HDMI video router that enables users to route HD signals up to 450 feet over a single Cat5e/6 cable, providing the ultimate solution to create clean and efficient video and digital signage systems with up to 16 inputs and 16 outputs.

Pristine high definition video has become the standard for entertainment, video systems and digital signage, but HD video routing has been confined by the necessity of short, bulky and unsightly cables. The HDR-Ultra, utilizing HDBaseT technology, breaks the distance limits that have tethered users as it facilitates the routing of crystal clear 1080p HD video, multi-channel audio, Ethernet, IR and power up to an incredible 450 feet through the use of inexpensive Cat5e/6 cables. With unprecedented flexibility and convenience, this new device is overhauling the old challenges of HD matrix routers with an elegant and easy-to-install solution.

The HDR-Ultra can direct up to 16 HD inputs and up to 16 outputs effortlessly. Routing HD signals across long distances from the user-friendly HDR-Ultra 4x4 exponentially increases users' ability to create the ideal digital video and audio experience in any environment.

The HDR-Ultra gives users the option of remotely switching the source – the primary function of an HDMI video matrix – as well as controlling the input sources, all from the same control. Thanks to reliable Cat5e/6 connections, it's never been easier to manage signal switching and the sources being switched all from a single control. This additional functionality allows for superior routing and viewing in contexts like home entertainment, digital signage, medical systems, live events and countless other venues.

Features

- Switches any 16 HDMI inputs to any 16 HDMI outputs with independent control
- Supports high definition video resolutions of 480p, 720p,1080i and 1080p
- Supports PC resolutions VGA, SVGA, SXGA, UXGA and WUXGA (1920 x 1200)
- Supports digital video formats in Deep Color up to 12bit per color
- Compatible with HDMI version 1.3 and DVI (with proper video converter)
- Supports 7.1 digital surround sound audio
- Supports EDID for total control of compliant displays
- Delivers uncompressed digital video with zero signal loss
- Input cable equalization
- HDMI Output up to 40 feet and longer with premium HDMI Cables
- Switching controlled via RS-232, IR, SmartControl GUI or web server
- Front panel 4x40 LCD display
- Easy switching via front panel
- Browser Graphical User Interface (GUI)
- Web-based interface
- Telnet support
- Firmware upgradeable for future support
- Extends HDMI, IR output over single Cat5/5e/6 UTP cable
- Extends IR and signals for remote control
- Delivers uncompressed HD video up to 1080p @ 60Hz @ 48 bits and 3D
- Data signals up to 3.4 Gbps
- Support RC5 IR for local switching
- Support IR bypass for 36 to 60Khz

Applications

- Wall Displays
- Digital Signage
- Airports
- Dealer Rooms
- Control Rooms
- Audio/Visual Presentations
- Shopping Centers
- Security
- Point-of-Sale
- Hotels/Resorts
- KVM Switch

HDMI Matrix Switching Made Easy

Users can locally switch between sources via the easy-to-operate front panel, or they can do so remotely through a RS-232, IR or TCP/IP connection. The HDR-Ultra can be controlled by SmartAVI's very own Windows®-based manager software, a cornerstone of all SmartAVI products.

Flexible Control

HDR-Ultra by SmartAVI can be controlled from the easily accessible LCD front panel and keypad that allows users to determine which inputs are connected to which outputs.

RS-232: Controlling the HDR-Ultra matrix is effortless with SmartAVI's Windows®-based SmartControl software. Users can assign a unique name to each port on the matrix along with a display for specific project requirements.

While all the functions of the matrix are available locally on the front panel, SmartControl allows customization of all the matrix's functions.

IR: Many system professionals prefer the IR control interface because it offers greater flexibility to manage the HDR-Ultra switches at a distance. In some cases, the displays will not be visible from the matrix, which would then make it necessary to control the matrix with infrared command signals.

TCP/IP: If users need to make changes instantly but can't be there in person, the Net-IP-Pro control module is the solution. SmartAVI's optional Net-IP-Pro module is effective for real-time remote control management. Simply connect the Net-IP-Pro module to the HDR-Ultra matrix while connected to the Internet and the matrix can be controlled from anywhere in the world.

EDID Emulation

Each input incorporates our unique "SmartEDID" programmable technology capable of learning video resolutions, audio settings and 3D data. The EDID memory of each display is stored in a single flash memory, giving users freedom to choose any EDID and emulation of any display.

HDR-Ultra enables HDMI and DVI sources to continuously read the EDID of a monitor with full emulation at any given time.

The EDID management allows learning and saving of up to 100 displays, including audio. With the support of HDMI 1.3, HDR-Ultra can learn EDID from any display device provided.

INFRARED CONTROL SUPPORT

Switching Inputs with Remote Control

Users can easily control the HDR-Ultra matrix via the SmartAVI remote control. The remote utilizes Philips RC5 IR transmission protocol and these signals can switch inputs on the HDR-Ultra. This handy feature gives users the freedom of remotely selecting inputs on the fly.

IR-EYE

SRC-2A

Remote Station Diagram

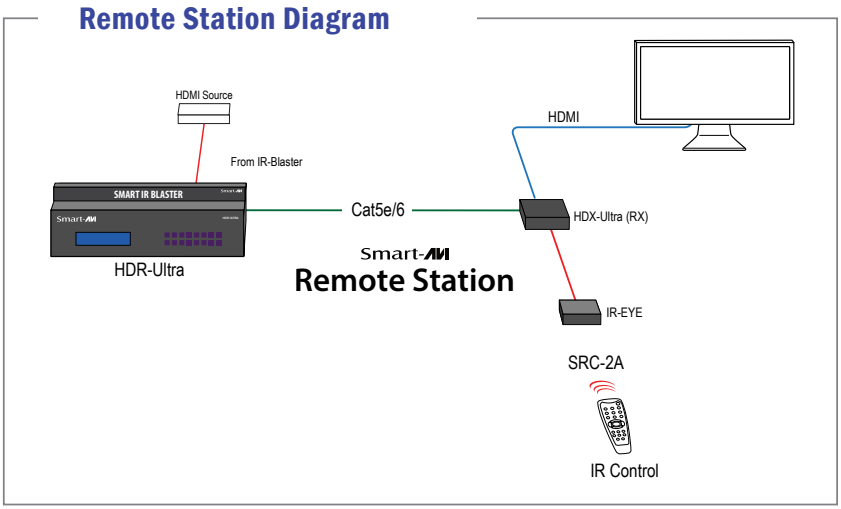

Control Devices with IR-Blaster

In addition to remote input switching, the SmartAVI remote control can also control the input itself. Sources like cable TV, DVD players and others can be selected on the matrix router and then be adjusted. It all happens with the same remote and without the need to run any new cables.

SmartAVI IR-Blaster

Front

Back

SmartAVI IR-Blaster Diagram

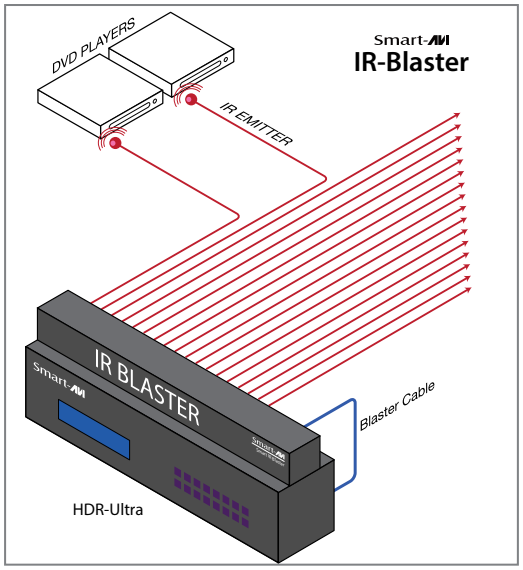

SmartAVI offers multiple solutions to control the HDR-Ultra Series

- Windows application
- Web based application
- Front panel switches and LCD
- Easy protocol for integration with the most common control systems such as: AMX, Creston, and more.

SmartControl

SmartConrol is the Windows® GUI application that enables users to control SmartAVI matrixes using graphic user interface without having to write the codes and send serial commands to the devices.

The software enables configuration of the size and type of the matrix, including a preset defined at macro.

The software also enables identification by name for each source and display.

Net-IP-Pro

Net-IP-Pro gives the user full control of the matrixes from anywhere in the world through this advanced new web browser software.

Net-IP-Pro enables multiple users to control and configure the matrix, including names of sources, names of displays, IP address and other low level features of the matrix.

The Net-IP-Pro enables the support of Telnet for easy integration with other control systems.

EASY SWITCHING, EASY EXTENSION

Front Panel

The HDR-Ultra front panel enables one to switch directly from the matrix without the use of any software.

Its LCD (4x40) offers detailed information about the status of the switch at any given moment.

HDX-Ultra-RX Receiver

Front

Back

HDX-Ultra-RX Receiver Diagram

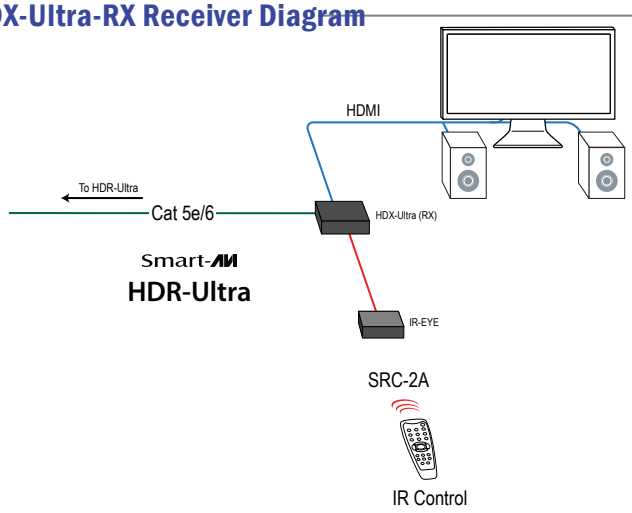

HDX-Ultra-RX Technical Specifications

VIDEO	
Format	HDMI 1.3 and HDCP compliant
HDTV Resolutions	480p, 720p, 1080i, 1080p/60Hz/48bit
TV Resolution	480i
Input Interface (TX)	HDMI Type A 19-pin Female TMDS
Output Interface (RX)	HDMI Type A 19-pin Female TMDS
Input Cable Length (TX)	Up to 40 ft.
Output Cable Length (RX)	Up to 40 ft.
AUDIO	
Format	Dolby TrueHD, DTS-HD MA
Input Interface	HDMI
Output Interface	HDMI
IR	
Signal Type	38 KHz
Interface	3.5 mm Jack Socket (Female)

SYSTEM	
Interface	RJ-45
Cable Requirements	Cat5e/6
Maximum Length	450 ft
OTHER	
Power	External 100-240 VAC/5VDC2A @10W
Dimensions	5” W x 1.125” H x 4.125” D
Weight	0.6 lbs.
Approvals	UL, CE, ROHS Compliant
Operating Temp.	32-131°F (0-55 °C)
Storage Temp.	-4-185 °F (-20-85 °C)
Humidity	Up to 95%

APPLICATION DIAGRAM

HDR-Ultra Front

HDR-Ultra Back

Application Diagram

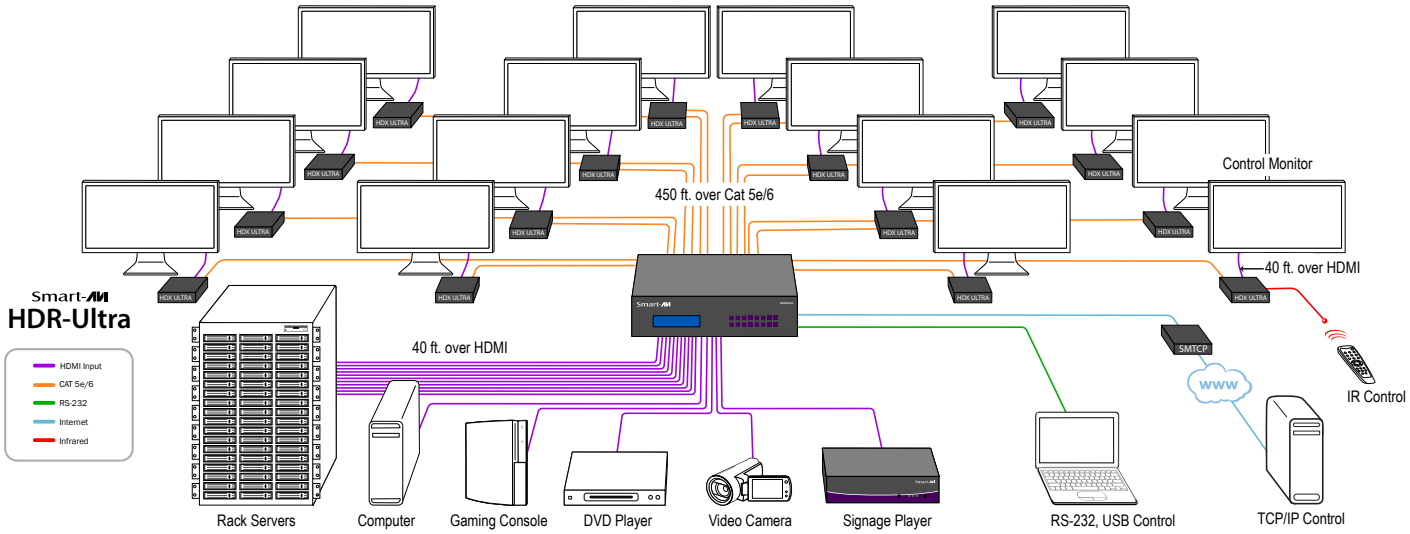

SPECIFICATIONS AND ORDERING INFORMATION

HDR-Ultra Technical Specifications

VIDEO	
Video Amplifier Bandwidth	3.2G
Input Video Signal	Video (TMDS) 0.5~1.0Vpp
Input DDC Signal	5 volts
Signal Supports	HDMI Standard, DVI and HDCP compliant
Pixel Rates	Clock frequency beyond 165Mpix/second
Format	4:4:4 and 4:2:2 data input formats
Resolution	480, 720p, 1080i, 1080p HDMI formats and DVI up to 1920x1200x60hz
Input Cards	2x HDMI Type A 19-pin Female TMDS
Output Cards	2x RJ45 HDBaseT HDMI over Cat5e/6 (UTP) Transmission Full 1080p 36-bit color:450 ft Cat5e/6, 23AWG
Input Slots	8 cards of 2 HDMI input each
Output Slots	8 cards of 2 RJ-45 output each
Video Type	RGB/YCBCR : 24/30/36-bits,YCBCR: 8/10/12/16/20/24-bits

AUDIO	
Audio Supported	DTS-HD Master Audio, Dolby True-HD & Dolby Digital Plus integrated in HDMI signal
POWER SUPPLY	
Internal	50/60Hz, 100~230 VAC
Consumption	300W
CONTROLS AND IR BYPASS	
IR	Control is 38Khz RC5 Bypass IR from 30Khz to 60Khz
Front	2x8 keyboard with 4x40 LCD
RS-232	9600bps, Software flow DB9 Female
TCP/IP	Webserver, Telnet
OTHER	
Working Temperature	0 to +40°C (+32° to +104° F)
Storage Temperature	-20° to +60°C (+20° to +140° F)
Weight	15 lbs.
DIMENSIONS	**DIMENSIONS**
Size	19 in W x 5.25 in H (3U) x 13 in D

ORDERING INFORMATION

Part No.	Description
HDRULT-0404	HDR4X4-ULTRA Expandable HDMI 4X4 Matrix Switcher with Cat5e/6 HDBaseT Outputs
HDRULT-0408	HDR4X8-ULTRA Expandable HDMI 4X8 Matrix Switcher with Cat5e/6 HDBaseT Outputs
HDRULT-0412	HDR4X12-ULTRA Expandable HDMI 4X12 Matrix Switcher with Cat5e/6HDBaseT Outputs
HDRULT-0416	HDR4X16-ULTRA Expandable HDMI 4X16 Matrix Switcher with Cat5e/6 HDBaseT Outputs
HDRULT-0804	HDR8X4-ULTRA Expandable HDMI 8X4 Matrix Switcher with Cat5e/6 HDBaseT Outputs
HDRULT-0808	HDR8X8-ULTRA Expandable HDMI 8X8 Matrix Switcher with Cat5e/6 HDBaseT Outputs
HDRULT-0812	HDR8X12-ULTRA Expandable HDMI 8X12 Matrix Switcher with Cat5e/6 HDBaseT Outputs
HDRULT-0816	HDR8X16-ULTRA Expandable HDMI 8X16 Matrix Switcher with Cat5e/6 HDBaseT Outputs
HDRULT-1204	HDR12X4-ULTRA Expandable HDMI 12X4 Matrix Switcher with Cat5e/6 HDBaseT Outputs
HDRULT-1208	HDR12X8-ULTRA Expandable HDMI 12X8 Matrix Switcher with Cat5e/6 HDBaseT Outputs
HDRULT-1212	HDR12X12-ULTRA Expandable HDMI 12X12 Matrix Switcher with Cat5e/6 HDBaseT Outputs
HDRULT-1216	HDR12X16-ULTRA Expandable HDMI 12X16 Matrix Switcher with Cat5e/6 HDBaseT Outputs
HDRULT-1604	HDR16X4-ULTRA Expandable HDMI 16X4 Matrix Switcher with Cat5e/6 HDBaseT Outputs
HDRULT-1608	HDR16X8-ULTRA Expandable HDMI 16X8 Matrix Switcher with Cat5e/6 HDBaseT Outputs
HDRULT-1612	HDR16X12-ULTRA Expandable HDMI 16X12 Matrix Switcher with Cat5e/6 HDBaseT Outputs
HDRULT-1616	HDR16X16-ULTRA Expandable HDMI 16X16 Matrix Switcher with Cat5e/6 HDBaseT Outputs
HDRULT-IR16	16-Port IR Router for HDMI HDBaseT Matrix Switcher
HDX-Ultra-RXS	HDMI, IR, RS-232, Point to Point Cat5e/6 Receiver. Includes: [HDX-Ultra-RX, PS5VD2A]

MADE IN THE USA
www.smartavi.com

Smart-AVI
SMART AUDIO VIDEO INNOVATION
Tel: 800.AVI.2131 • 818.503.6200 • 11651 Vanowen St. North Hollywood, CA. 91605