HALL RESEARCH

User's Manual

Sender Wall Plate

Receiver

EX-HDU Series

HDMI and USB Extension on single CAT6 with Audio Out and Integrated Control System

Part Number	Function
EX-HDU-WP	Sender Wall Plate (Decora® Style)
EX-HDU-R	Receiver
EX-HDU-R-IP	Receiver with IP/LAN Control & Web GUI

UMA1264 Rev A

CUSTOMER SUPPORT INFORMATION

Order toll-free in the U.S. 800-959-6439
FREE technical support, Call **714-641-6607** or fax **714-641-6698**
Mail order: **Hall Research**, 1163 Warner Ave. Tustin, CA 92780
Web site: www.hallresearch.com E-mail: info@hallresearch.com

Table of Contents

1.0 Introduction **3**
Features 4
2.0 Package Contents **5**
3.0 Setup **5**
Installation 5
4.0 Connector and Indicator Functions **6**
EX-HDU wall-plate Sender 6
EX-HDU Receiver 7
5.0 Troubleshooting **9**
Contacting Hall Research 9
6.0 Specifications **10**

© Copyright 2018 Hall Research, Inc.

1.0 Introduction

The EX-HDU is used to extend HDMI video and USB data on a single Cat6 cable up to 200 ft (60 meters). HDMI audio is extracted and is provided both as analog stereo and multi-channel digital. The EX-HDU can also be used to control other equipment by providing programmable contact closure I/O, RS-232 output, IR output, and optional LAN interface with internal WebGUI and IP control.

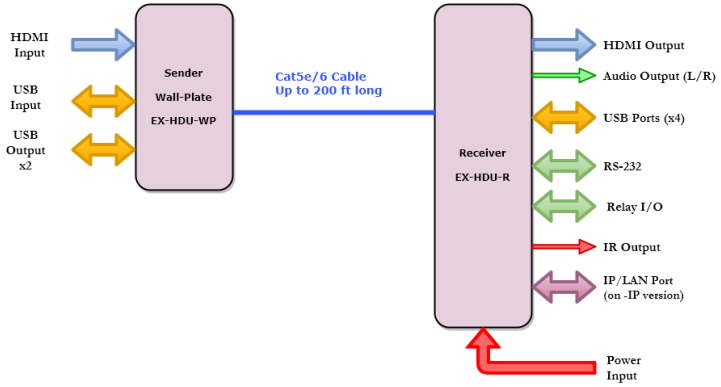

The EX-HDU extender consists of an EX-HDU-WP single-gang wall plate transmitter and an EX-HDU-R (or EX-HDU-R-IP) receiver. They connect using standard CAT5e/6 UTP cabling up to 200 feet (60 Meters) long.

The wall-plate Sender gets its power from the Receiver via the same UTP cable and does not need a separate power supply. For convenience, the wall plate features a USB hub with two USB ports for connection of USB devices. The plug-and-play extender is compatible with all PCs, MACs, and Android Tablets and does not require driver installation. Simply plug the PC's HDMI and USB ports to the sender and make them available at the remote receiver.

The Receiver provides HDMI video output, stereo audio output, 4 USB ports, IR output, and a terminal strip that has RS-232 output plus 4 programmable digital I/O ports. A mini-USB port is also provided for configuration upload from a PC for cases where the Receiver is used also as a control system.

Receiver with IP connectivity is the model EX-HDU-R-IP. It provides an ETHERNET port for control via IP commands or internal webpage.

Users can upload RS-232 commands to the EX-HDU to control other equipment such as turning a projector on and off. Commands can be triggered *automatically* by detecting video, or *manually* via the internal WebGUI, or by sensing open and close contact events on the I/O ports.

© Copyright 2018 Hall Research, Inc.

For example, a simple toggle switch can be connected remotely to activate RS-232 commands for turning a projector on and off. The I/O ports can be configured to act as INPUTS or OUTPUTS. When an I/O port is configured as

Example of WebGUI control
(for units with IP interface)

OUTPUT, it can trigger relays, for example to lower or raise a motorized projector screen.

A free PC software is available for configuring the system and to upload control commands.

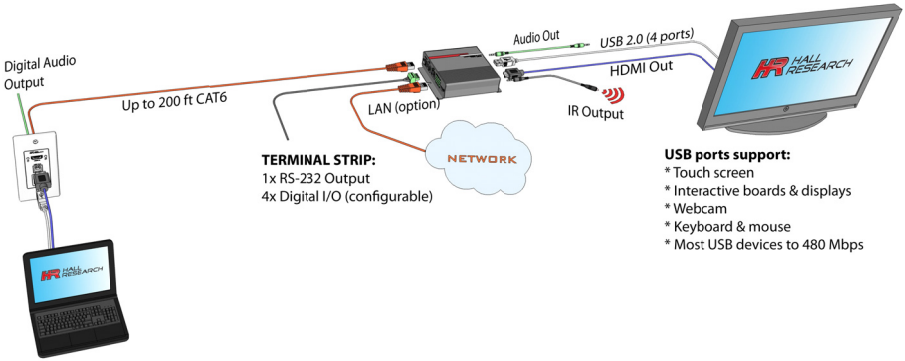

Typical Connection Diagram

Features

- Extends HDMI + USB 2.0 to 200 ft (60 m) on one Cat 6 cable
- Supports HDTV resolutions to 1080p 60 Hz
- Wall plate sender has 2-port hub for connection to USB devices to the host PC
- Receiver provides HDMI output, 4 USB ports, RS-232 for display control, and contact closure I/O, and stereo audio outputs
- Perfect for Interactive displays, Soft CODECs, and KVM extension
- Wall plate does not require separate power supply
- Receiver is available with optional IP and WebGUI control

© Copyright 2018 Hall Research, Inc.

2.0 Package Contents

EX-HDU-WP

(1) Decora Wallplate with (2) screws
(1) 4-Position Terminal Strip
(1) Type A to B USB Cable

EX-HDU-R and **EX-HDU-R-IP**

(1) 12V DC Universal DC Power Adapter
(2) 6-Position Terminal Strip
(1) Type A to Mini-B USB cable
(1) User's Manual

3.0 Setup

Installation

- Connect the sender (EX-HDU-WP) and the receiver (EX-HDU-R) with a CAT6 cable.
- Connect the HDMI source (such as video from a PC) to the wall plate's HDMI input.
- *Optionally,* connect the wall plate's USB HOST *(type B)* connector to a compatible HOST computer via the supplied cable.
- *Optionally,* connect compatible USB devices into the wall plate's USB hub connectors or the USB HUB connectors on the receiver.
- *Optionally,* connect the HDMI extracted SPDIF audio output on the back of the wall plate to a compatible audio device.
- *Optionally,* connect the receiver's 3.5mm analog audio output to compatible device (e.g., headphones, assistive listening devices).
- *Optionally,* for controlling an external device (such as a Projector) via RS-232, use the TX, RX and GND contacts on the Terminal Strip.
- *Optionally,* Connect I/O devices to the Terminal Strip as required. See section 4 for more details. Each of the 4 I/O ports can be configured to be an input or output. When configured as an input, the device can sense contact closure (or DC voltage). When a transition is sensed, the EX-HDU can issue programmed actions. Actions can be any combination of RS-232 commands, IR commands or contact closure output state changes. When an I/O port is configured as an output, it acts as an open-collector digital output.

© Copyright 2018 Hall Research, Inc.

4.0 Connector and Indicator Functions

EX-HDU wall-plate Sender

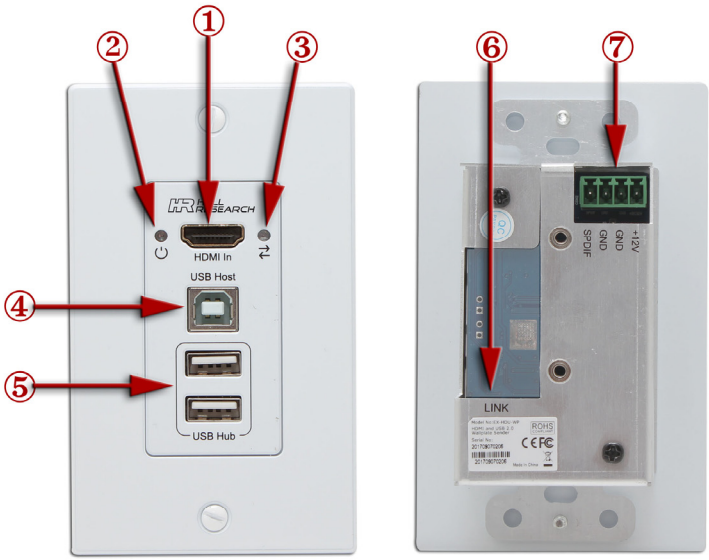

Front Rear

1) HDMI Input - Connect Source Video to this Connector
2) Power Indicatior - Lights green when wall plate is powered up
3) Signal Indicator - Lights red when vide signal source is active
4) USB Host - If USB extension is needed, connect to Host USB (such as PC) using the supplied USB A to B cable.
5) USB Hub Ports - These are available to the user. Connect USB 2.0 devices such as flash memory, printer, HD WebCam, keyboard, etc
6) Link RJ45 Connector - Use a Cat6 cable to connect to the Receiver.
7) Terminal Strip
    a. +12v & GND - Used for factory testing only; leave open
    b. SPDIF & GND - Digital Audio Output. This is the extracted digital audio of the HDMI signal. It is simply deembedded without any modification. It echos the HDMI audio and can be stereo or multichannel

© Copyright 2018 Hall Research, Inc.

EX-HDU Receiver

Front

Rear

1) IR Connector - This connector can be connected to a compatible IR emitter cable (such as Hall Research CIR-EMT or CIR-KIT-EMT2). To use this feature customers need to know the IR protocol and IR data for the device they want to control. This information may be difficult to obtain. Please refer to Software GUI User's Guide for more information.
2) USB Hub Ports - Use these connectors to plug USB 2.0 devices such as touch screen, interactive displays or smart boards, printers, HD WebCams, Keyboard/Mouse, etc
3) Analog Stereo 3.5mm Output. - Connect to headphones, audio amps or other gear. If the source is sending multi-channel audio this output will be muted since it only supports two channel audio.
4) HDMI Output
5) Power and Active Video indicator LEDs
6) Configuration Port - This port is used to configure the device when it is going to be used as a controller. Connect this port to a Windows PC running the free Windows configuration software (available for download on the product's webpage)

© Copyright 2018 Hall Research, Inc.

7) RS-232 Port and 4 Digital I/O ports
   a. The RS-232 port typically functions as an output and is used to turn a projector on or off or control the volume of an external audio amplifier. The RS-232 port can also be used as an input to control the EX-HDU itself. For example, users can send a command to the Receiver that causes it to issue a corresponding IR output command. Please refer to Software GUI User's Guide for futher information and command list.
   b. The 4 digital I/O ports each have a signal and a ground contact (G indicates ground). For convenience a 5v output is also provided (with 80ma of maximum current available).

      Each of the I/O ports can be configured to act as an input or as an output. When configured as input, they can sense high/low signal transitions or open/close contact events. System can be programmed to issue RS232 or IR commands based on those transitions. For example a simple external toggle switch can be used to issue on and off commands to a projector. Note that commands can also be triggered by detecting video, so the on/off command functions can be automatic.

      When the I/O ports are configured as output, they behave as Open Collector (similar to contact closure) and can withstand upto 30V DC in open state. These ports can be used to control equipment such as motorized projector screens.
8) Optional LAN Port - This connector is only functional on the Receiver with the IP control option (EX-HDU-R-IP). Users can configure an internal Web GUI with buttons to control the unit or peripheral equipment. Please refer to Software GUI User's Guide for futher information.
9) Link RJ45 Connector - Connects to the corresponding LINK port on the Wall Plate Sender.
10) Power Input - Connects to the power supply provided

© Copyright 2018 Hall Research, Inc.

5.0 Troubleshooting

If you are experiencing problems getting the extender to work properly, please use the following troubleshooting suggestions.

- Ensure that all connections on both the sender and the receiver are solid. Loose connections are the number one cause of issues.
- Try resetting the system by unplugging the power supply, waiting 5 seconds and plugging it back. Both the red and green LEDs on the EX-HDU-R shall illuminate.
- Try restoring factory defaults using the Windows GUI or via RS-232 command.

NOTE Backup any existing device configuration using the Windows™ GUI Prior to resetting factory defaults as any user programmed command strings will be erased.

Contacting Hall Research

If you determine that your Extender is malfunctioning, do not attempt to repair the unit instead, contact Hall Research Technical Support at 714-641-6607. To return the unit to Hall Research you must first get a Return Authorization (RMA) number. Package the unit carefully, if returning. We recommend that you use the original container.

© Copyright 2018 Hall Research, Inc.

6.0 Specifications

Video

Standards	DVI (single link) HDMI 1.4 video specifications including 12 bit color depth, 3D video HDCP 1.4
Connectors	**EX-HDU-WP** (1) HDMI Input **EX-HDU-R** (1) HDMI Output
Resolutions	DVI signal VGA (640x480) thru WUXGA (1920x1200) HDTV signal 480p through 1080p60 (Interlaced resolutions are not supported)

Audio

Formats	LPCM 2CH Audio (32-192kHz sample rate)

Other Signals

RS-232	(1) RX, TX and GND on Terminal Strip RS-232 Baud Rate: 9600, N, 8, 1 (factory default) Configurable at 1200, 2400, 4800, 9600, 19200, 38400, 57600, or 115200
USB	**Wallplate** (1) Type B USB host PC connection (2) Type A USB hub port extension **Receiver** (1) Mini-B for configuration (4) Type A USB hub port extension

General

Power Supply	100 VAC to 240 VAC, 47-63 Hz, External; 12 VDC
Temp/humidity	Storage: -40 to +158 °F (-40 to +70 °C) / 10% to 90%, non-condensing Operating: +32 to +122 °F (0 to +50 °C) / 10% to 90%, non-condensing
Typical DC Current Draw	12 VDC, 2.0 A Power Supply ~300-650 mADC depending on # of connected USB devices
Cooling	Convection
Enclosure type	Metal (Steel)
Dimensions	EX-HDU-WP - 2.60" H x 1.30" W x 1.80" D (66mm H x 33mm W x 46mm D) EX-HDU-R - 1.18" H x 4.13" W x 4.57" D (30mm H x 105mm W x 116mm D) Depth includes mounting flanges
Product weight	Model Only EX-HDU-WP - 0.75 lb EX-HDU-R - 1.20 lb Shipping EX-HDU-WP - 1.25 lb EX-HDU-R - 1.70 lb EX-HDU-WP + EX-HDU-R - 2.50 lb
Safety	CE
EMI/EMC	CE, FCC Class A
MTBF	90,000 hours (estimate)
Warranty	3 years parts and labor

Specifications are subject to change without notice

© Copyright 2018 Hall Research, Inc.

© Copyright 2018 Hall Research, Inc.

© Copyright 2018. Hall Research, Inc.
All rights reserved.

1163 Warner Ave., Tustin, CA 92780
Ph: (714)641-6607